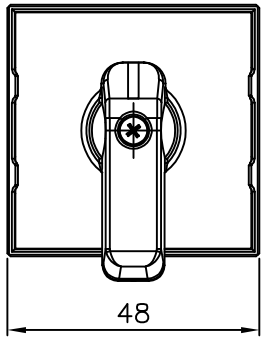

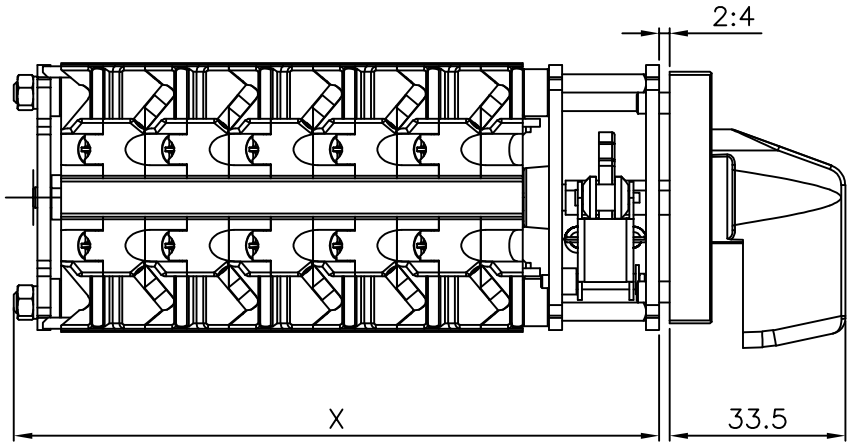

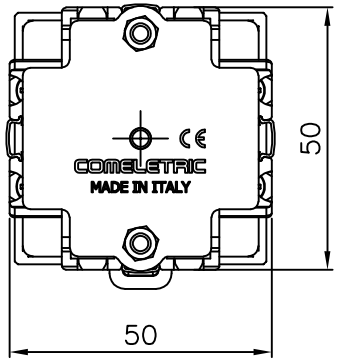

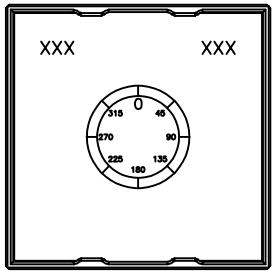

N° PACCHI N° PACKETS	1	2	3	4	5	6	7	8	9	10	11	12	13	14	15	16	17	18	19	20	21	22	23	24
X= LUNGH. mm Lenght mm.	51	59	67	75	83	91	99	107	115	123	131	139	147	155	163	171	179	187	195	203	211	227	235	243

Legend Symbols	
	RITORNO AUTOMATICO Spring return
X	CONTATTO CHIUSO Closed contact
XX	CHIUSO SENZA INTERRUZIONE Closed without current breaking

	PACCHI Packets	1	2	3	4	5	6	7	8	9	10	11	12	13	14	15	16	17	18	19	20	21	22	23	24
POSIZIONI Positions	MORSETTI Contacts																								
	DICITURE Engravings																								
TITLE																									
1	XXX																								
2	XXX																								

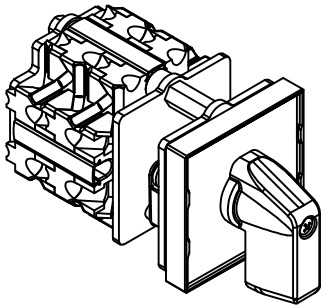

Panel Drilling

F6.4

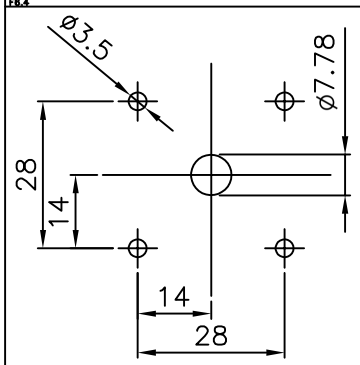

COMELETRIC	All technical informations contained in this document is the exclusive property of COMELETRIC and may neither be used nor disclosed without its consent.	Drawn LR	Sheet 1/3	Approved by – Date LR/11/09/20	Escutcheon plate 48–XXXXX	Type: R16 2/XX
		Checked LR	Scale 1:1	Rev. N° A		Code: R601SE2XXXXX–W002