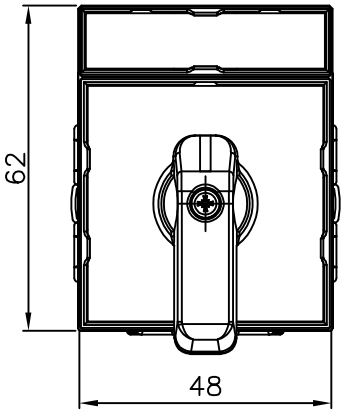

HANDLE	COLOR
FRONTPLATE	COLOR
HOLDER	COLOR
TEXT	COLOR

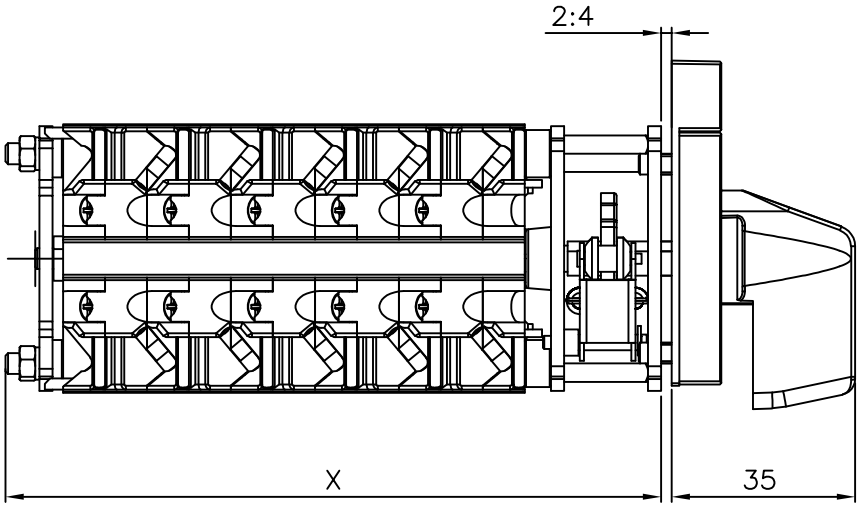

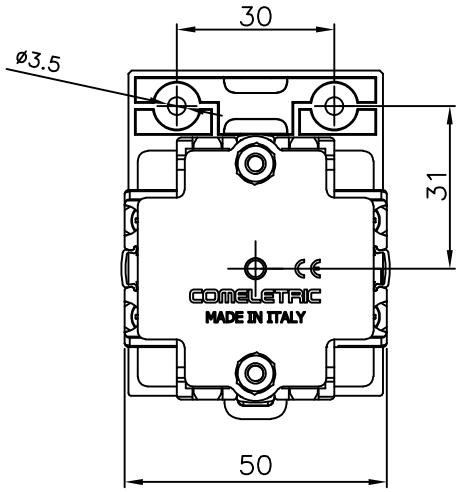

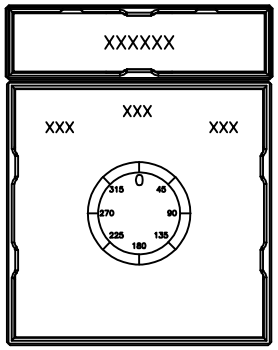

N° PACCHI N° PACKETS	1	2	3	4	5	6	7	8	9	10	11	12	13	14	15	16	17	18	19	20	21	22	23	24
X= LUNGH. mm Lenght mm.	51	59	67	75	83	91	99	107	115	123	131	139	147	155	163	171	179	187	195	203	211	227	235	243

Legend Symbols	
↓	RITORNO AUTOMATICO Spring return
X	CONTATTO CHIUSO Closed contact
XX	CHIUSO SENZA INTERRUZIONE Closed without current breaking

		PACCHI Packets	1	2	3	4	5	6	7	8	9	10	11	12	13
POSIZIONI Positions		MORSETTI Contacts													
		DICITURE Engravings													
TITLE															
1	XXX														
2	XXX														
3	XXX														

14	15	16	17	18	19	20	21	22	23	24

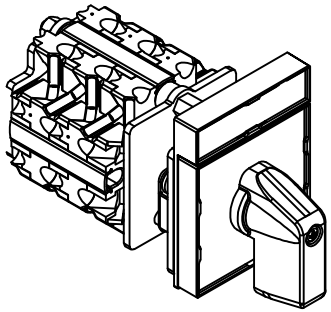

Panel Drilling

F6.4

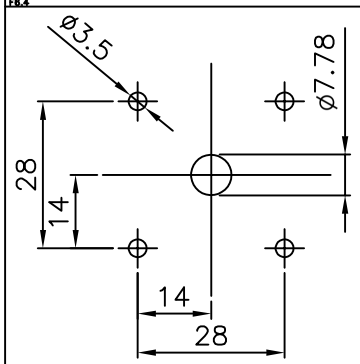

COMELETRIC	All technical informations contained in this document is the exclusive property of COMELETRIC and may neither be used nor disclosed without its consent.	Drawn FR	Sheet 1/3	Approved by – Date FR	Escutcheon plate 48–XXXXXTXXX	Type: R16 3/X
		Checked FR	Scale 1:1	Rev. N° A		Code: R601 SE3XX XXX–W008