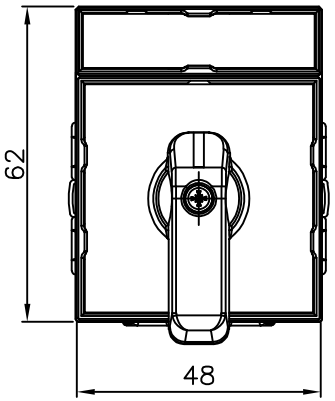

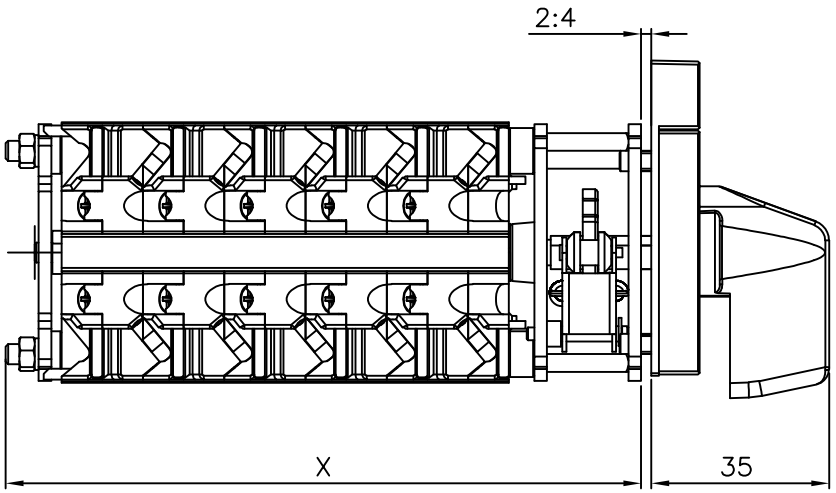

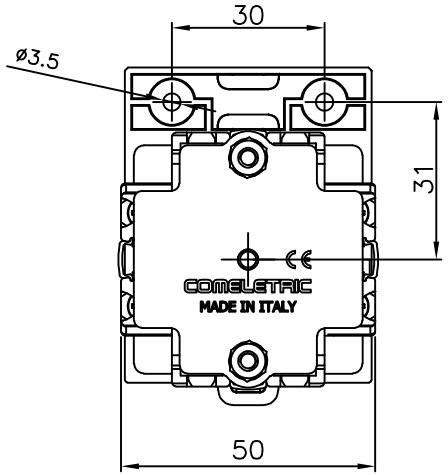

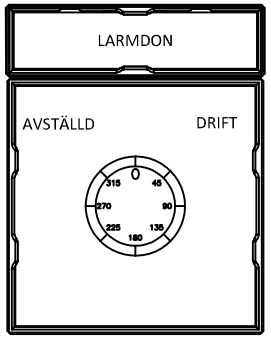

N° PACCHI N° PACKETS	1	2	3	4	5	6	7	8	9	10	11	12	13	14	15	16	17	18	19	20
X= LUNGH. mm Lenght mm.	51	59	67	75	83	91	99	107	115	123	131	139	147	155	163	171	179	187	195	203

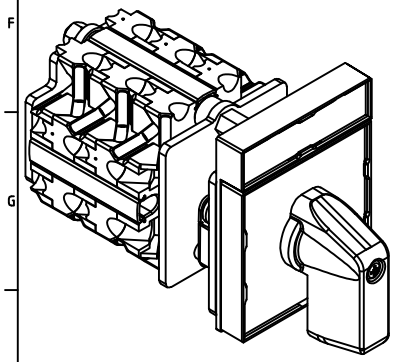

Legend Symbols	
	RITORNO AUTOMATICO Spring return
X	CONTATTO CHIUSO Closed contact
XX	CHIUSO SENZA INTERRUZIONE Closed without current breaking

	PACCHI Packets	1		2	
POSIZIONI Positions	MORSETTI Contacts	1	3	5	7
	DICITURE Engravings	2		6	
TITLE					
1	AVSTÄLLD	X		X	
2	DRIFT		X		X

Panel Drilling

F6.4

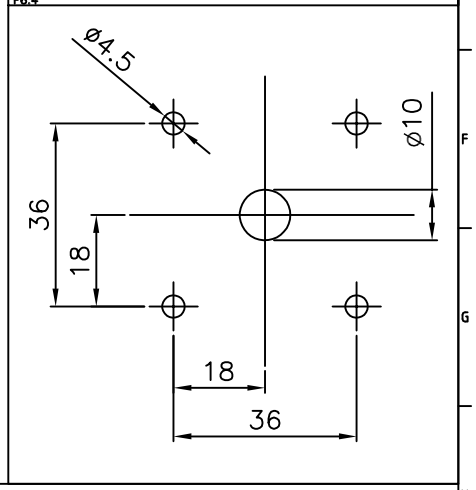

COMELETRIC	All technical informations contained in this document is the exclusive property of COMELETRIC and may neither be used nor disclosed without its consent.	Drawn FR	Sheet 1/3	Approved by – Date FR	Escutcheon plate 48–21100T208	Type: R16 2/2
		Checked FR	Scale 1:1	Rev. N° A		Code: R601 SE202 008–W008